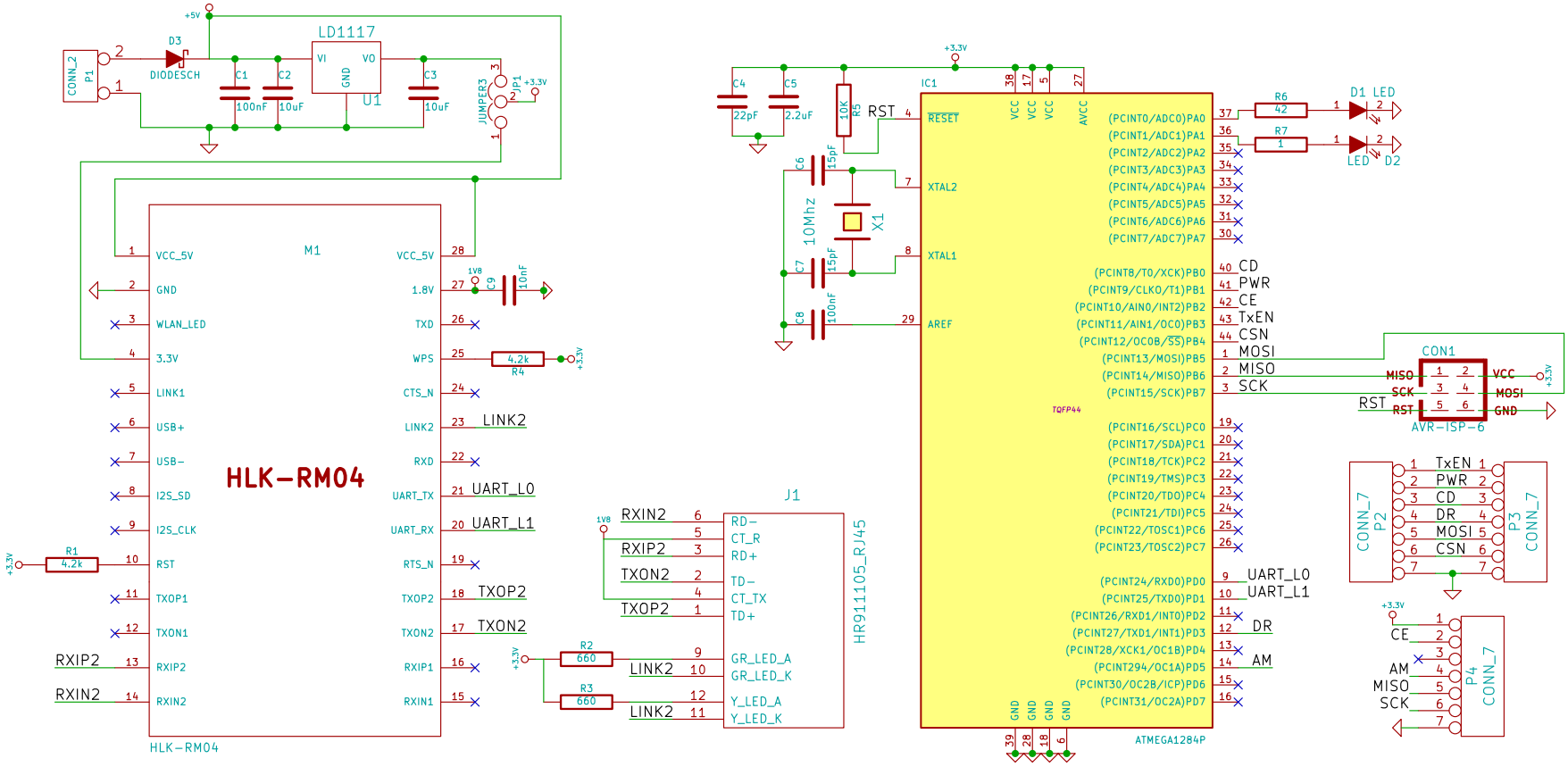

Jiří Němec		
File: harvestr_receiver.sch		
Sheet: /		
Title: Prijimac		
Size: A4	Date: 15 may 2014	Rev:
KiCad E.D.A.		Id: 1/1