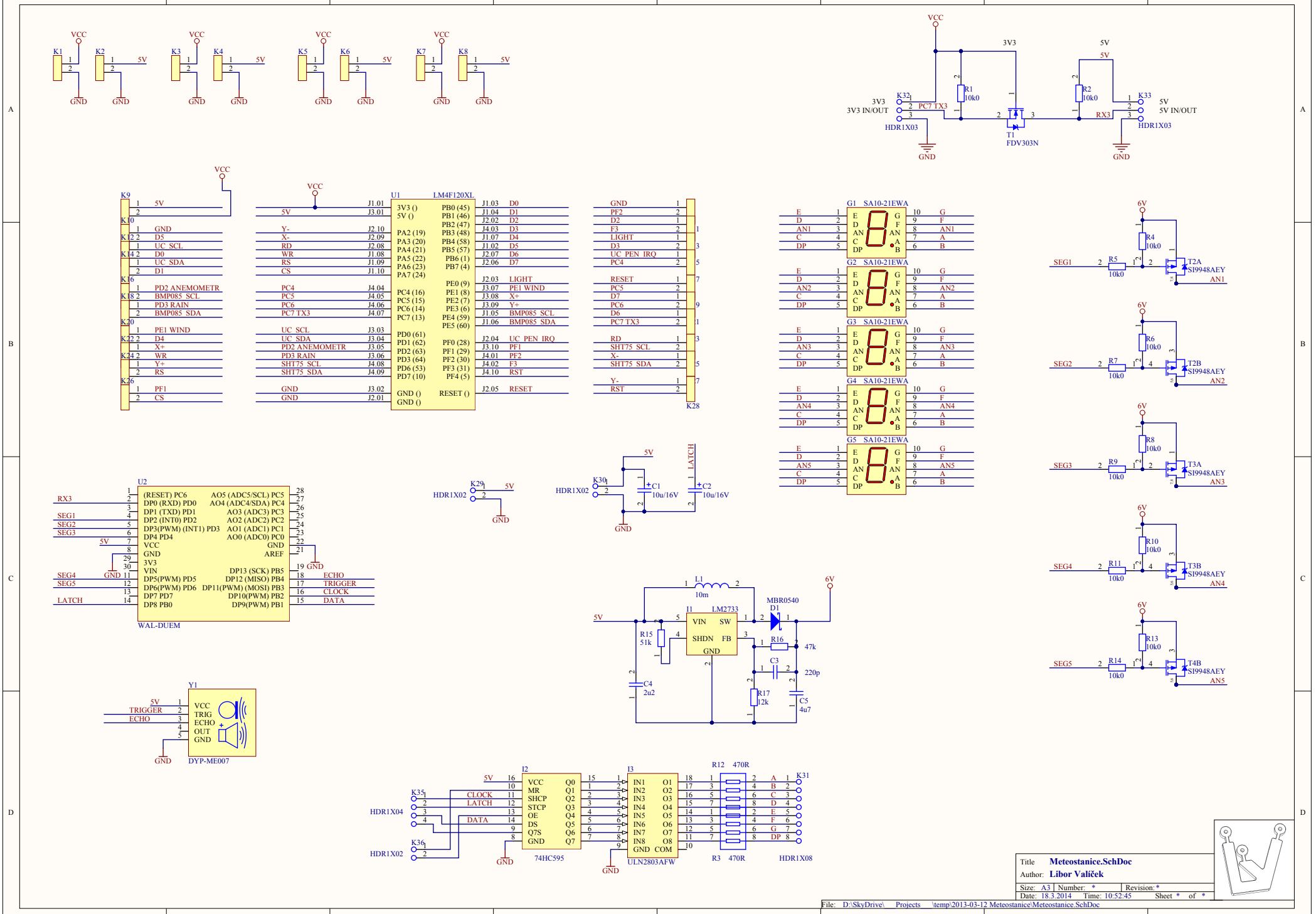
K1 K2 K3 K4 K5 K6 K7 K8
VCC
5V
GND
3V3
3V3 IN/OUT
K32
HDR1X03
PC7 TX3
R1 10k0
T1 FDV303N
R2 10k0
RX3
K33
5V IN/OUT
K9 K10 K12 K14 K16 K18 K20 K22 K24 K26
5V
GND
D5
UC_SCL
D0
UC_SDA
D1
PD2 ANEMOMETR
BMP085_SCL
PD3 RAIN
BMP085_SDA
PE1 WIND
D4
X+
WR
Y+
RS
PF1
CS
U1 LM4F120XL
3V3 ()
5V ()
PA2 (19)
PA3 (20)
PA4 (21)
PA5 (22)
PA6 (23)
PA7 (24)
PC4 (16)
PC5 (15)
PC6 (14)
PC7 (13)
PD0 (61)
PD1 (62)
PD2 (63)
PD3 (64)
PD6 (53)
PD7 (10)
GND ()
GND ()
PB0 (45)
PB1 (46)
PB2 (47)
PB3 (48)
PB4 (58)
PB5 (57)
PB6 (1)
PB7 (4)
PE0 (9)
PE1 (8)
PE2 (7)
PE3 (6)
PE4 (59)
PE5 (60)
PF0 (28)
PF1 (29)
PF2 (30)
PF3 (31)
PF4 (5)
RESET ()
J1.01 J1.03 J1.04 J2.02 J4.03 J1.07 J1.02 J2.07 J2.06 J2.03 J3.07 J3.08 J3.09 J1.05 J1.06 J2.04 J3.10 J4.01 J4.02 J4.10 J2.05
J3.01 J2.10 J2.09 J2.08 J1.08 J1.09 J1.10 J4.04 J4.05 J4.06 J4.07 J3.03 J3.04 J3.05 J3.06 J4.08 J4.09 J3.02 J2.01
D0 D1 D2 D3 D4 D5 D6 D7 LIGHT PE1 WIND X+ Y+ BMP085_SCL BMP085_SDA UC_PEN_IRQ PF1 PF2 F3 RST
K28
GND PF2 D2 F3 LIGHT D3 UC_PEN_IRQ PC4 RESET PC5 D7 PC6 D6 PC7 TX3 RD SHT75_SCL X- SHT75_SDA Y- RST
G1 G2 G3 G4 G5 SA10-21EWA
E D AN C DP G F AN A B
AN1 AN2 AN3 AN4 AN5
6V
R4 R5 R6 R7 R8 R9 R10 R11 R13 R14 10k0
T2A T2B T3A T3B T4B SI9948AEY
SEG1 SEG2 SEG3 SEG4 SEG5
U2 WAL-DUEM
(RESET) PC6
DP0 (RXD) PD0
DP1 (TXD) PD1
DP2 (INT0) PD2
DP3(PWM) (INT1) PD3
DP4 PD4
VCC
GND
3V3
VIN
DP5(PWM) PD5
DP6(PWM) PD6
DP7 PD7
DP8 PB0
AO5 (ADC5/SCL) PC5
AO4 (ADC4/SDA) PC4
AO3 (ADC3) PC3
AO2 (ADC2) PC2
AO1 (ADC1) PC1
AO0 (ADC0) PC0
GND
AREF
DP13 (SCK) PB5
DP12 (MISO) PB4
DP11(PWM) (MOSI) PB3
DP10(PWM) PB2
DP9(PWM) PB1
RX3 SEG1 SEG2 SEG3 SEG4 SEG5 LATCH
ECHO TRIGGER CLOCK DATA
K29 HDR1X02
K30 HDR1X02
C1 10u/16V
C2 10u/16V
LATCH
L1 10m
I1 LM2733
VIN SW SHDN FB GND
MBR0540 D1
R15 51k
R16 47k
C3 220p
R17 12k
C4 2u2
C5 4u7
Y1 DYP-ME007
VCC TRIG ECHO OUT GND
TRIGGER ECHO
I2 74HC595
VCC MR SHCP STCP OE DS Q7S GND
Q0 Q1 Q2 Q3 Q4 Q5 Q6 Q7
CLOCK LATCH DATA
K35 HDR1X04
K36 HDR1X02
I3 ULN2803AFW
IN1 IN2 IN3 IN4 IN5 IN6 IN7 IN8 GND
O1 O2 O3 O4 O5 O6 O7 O8 COM
R12 470R
R3 470R
K31 HDR1X08
A B C D E F G DP
Title Meteostanice.SchDoc
Author: Libor Valíček
Size: A3 Number: * Revision: *
Date: 18.3.2014 Time: 10:52:45 Sheet * of *
File: D:\SkyDrive\ Projects \temp\2013-03-12 Meteostanice\Meteostanice.SchDoc